2 PUMP - 4 DUMP SETUP

FRONT PUMP USING 3 SOLENOIDS, REAR PUMPS USING 3 SOLENOIDS

TX2RX AUTOMOTIVE WIRELESS SOLUTIONS

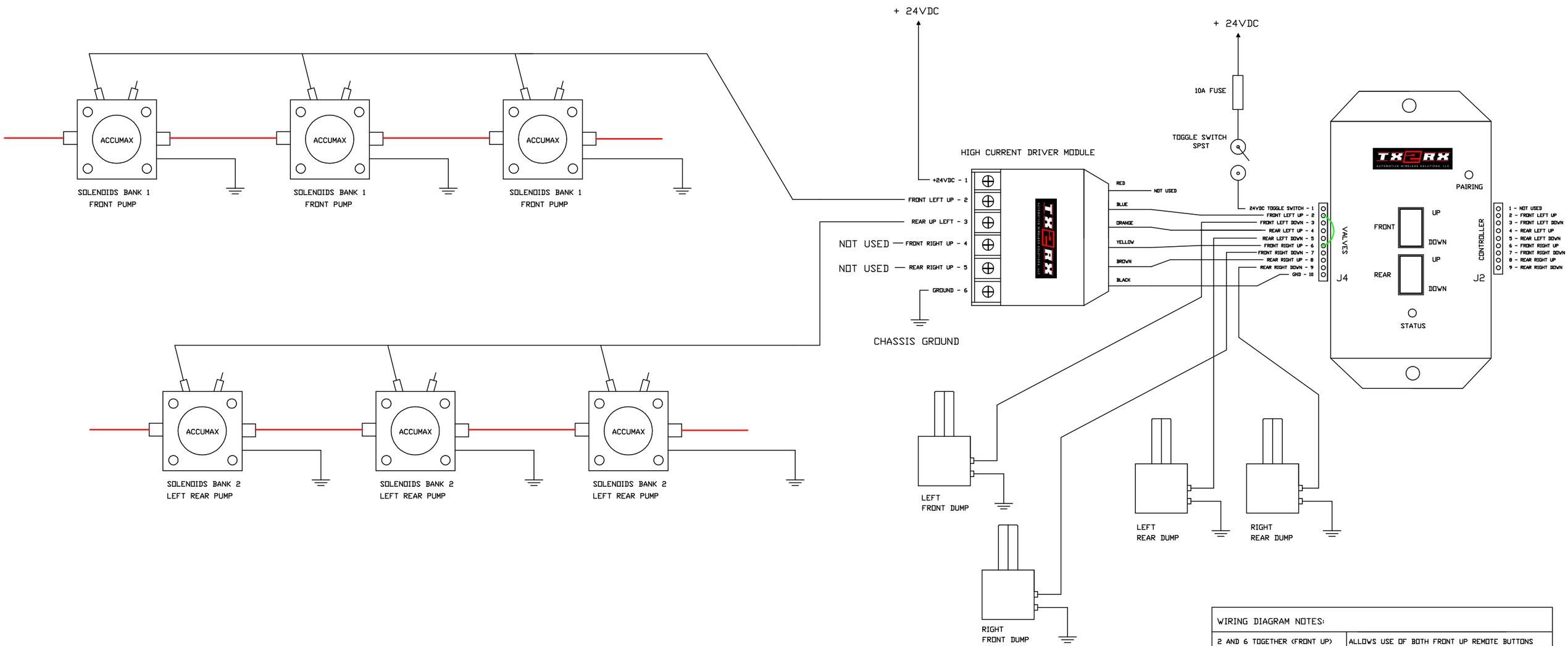

WIRING DIAGRAM NOTES:	
2 AND 6 TOGETHER (FRONT UP)	ALLOWS USE OF BOTH FRONT UP REMOTE BUTTONS
4 AND 8 TOGETHER (REAR UP)	ALLOWS USE OF BOTH REAR UP REMOTE BUTTONS
JUMPER WIRE ARE NOT REQUIRED. IT ALLOWS EITHER LEFT OR RIGHT REMOTE BUTTONS TO OPERATE.	